RUGIPO Research & Technical Journal; Vol. 3, Issue 1: Issues in Science & Agricultural Technology; Sept, 2024 Edition
https://elearning.rugipo.edu.ng/Rugipo_Tetfund_Journal_Research_Portal/
ISSN: 2714-3643 E-mail: rugipotechjournal@rugipo.edu.ng, or rugiporetechjournal@gmail.com.
Proudly Sponsored by: tetfund TERTIARY EDUCATION TRUST FUND
TETFund/ESS/POLY/OWO/ARJ/1

DEVELOPMENT OF AN IOT-BASED HOME AUTOMATION SYSTEM USING BLUETOOTH AND WI-FI COMMUNICATION

[1]Oguntade, O. F., [1*]Aladenika, A. K., [2] Babawale, J. A. and [1] Olarewaju, O. M.
Department of Science Laboratory Technology, Rufus Giwa Polytechnic, Owo. Ondo State, Nigeria;
[2]Department of Science Laboratory Technology, Federal Polytechnic, Offa. Kwara State, Nigeria.
*aladenikaadesuyi@gmail.com

Abstract
Revolutionary IoT-based home automation system that leverages Bluetooth and Wi-Fi communication. This innovative system utilizes a GSM module, SIM800L, and ESP32 devices, seamlessly controlled by sending a trigger SMS to the controller. Through this system, the internet enables interconnected home devices, allowing users to remotely monitor and manage systems and appliances efficiently. We achieved this by uploading the Arduino program onto a smartphone, effectively controlling the relay module, ESP32, and SIM800L. Notably, the ESP32 Module effortlessly connected to 220V AC wires within seconds, demonstrating exceptional performance without false triggering. Upon uploading the Arduino code, the blue LED indicator confirmed the ESP32's Wi-Fi connection, enabling relay module control via the IoT Cloud Platform Our SIM800L Home Automation operates by sending command messages from the phone to the GSM module through Arduino code. Arduino then detects this message and sends the command to the relay module, using alphabets "a" and "b" to turn appliances on and off. This setup ensures continuous monitoring of data from the GSM module.

Keywords: Arduino, Automation System, GSM model, LED indicator, Smartphone

Introduction

Smart home technology allows the use of computers to control the basic functions and features of the home either automatically or remotely (Ahmed, 2012). Smart home technology includes either scheduling or automatic operation of heating and air conditioning, as well as lighting and security systems. This technology enables users to control various functions via remote control with the help of a computer linked to the internet (Shaikh et al., 2017). The internet allows for home devices to be interconnected, thus enabling users to remotely monitor and manage systems and appliances.

The control of these devices can be done by Smartphone applications or computers. For smartphones, it can be done through a user interface on specific apps through a touch-sensitive platform where specific tasks can be autonomously controlled (Hamernik et al., 2012). Alternatively, computer control can be achieved through input devices such as a mouse or even through voice commands (Vijay et al., 2022). The invention of home appliances such as a television with a remote control which is a simple home automation system was patented in 1893. Other than that, more home appliances have been invented since that. In early 2000, the popularity of smart home automation began to increase due to different technologies started to arise (Tiwari et al., 2017). Smart home automation turned into a more affordable choice and therefore a viable or available technology for consumers. With the uprising of the prestige of smart homes, home networking, domestic technologies and other gadgets began to emerge on

RUGIPO Research & Technical Journal; Vol. 3, Issue 1: Issues in Science & Agricultural Technology; Sept, 2024 Edition
https://elearning.rugipo.edu.ng/Rugipo_Tetfund_Journal_Research_Portal/
ISSN: 2714-3643 E-mail: rugipotechjournal@rugipo.edu.ng, or rugiporetechjournal@gmail.com.
Proudly Sponsored by: tetfund TERTIARY EDUCATION TRUST FUND
TETFund/ESS/POLY/OWO/ARJ/1

store shelves (Brush et al., 2011). Today's smart home automation is more emphasised about smart living, living greener and security. Our smart home is sustainable and it ensures that our home is not utilizing unnecessary energy. In addition, the smart home also can prevent any intruders by alerting us with an alarm or sending any signal to us through smartphone-related applications (Deepalij et al., 2013). The current trend in smart home automation includes automated lights, remote mobile control, remote video surveillance and receiving notifications of mobile, email and text (Vinay Sagar, 2015).

Methodology

The materials and methods used in our IoT-based home automation project.

Hardware Components:

1. ESP32 Module
2. Relay Module (Single-channel)
3. SIM800L GSM/GPRS Module
4. Power Supply (12V or 230VAC)

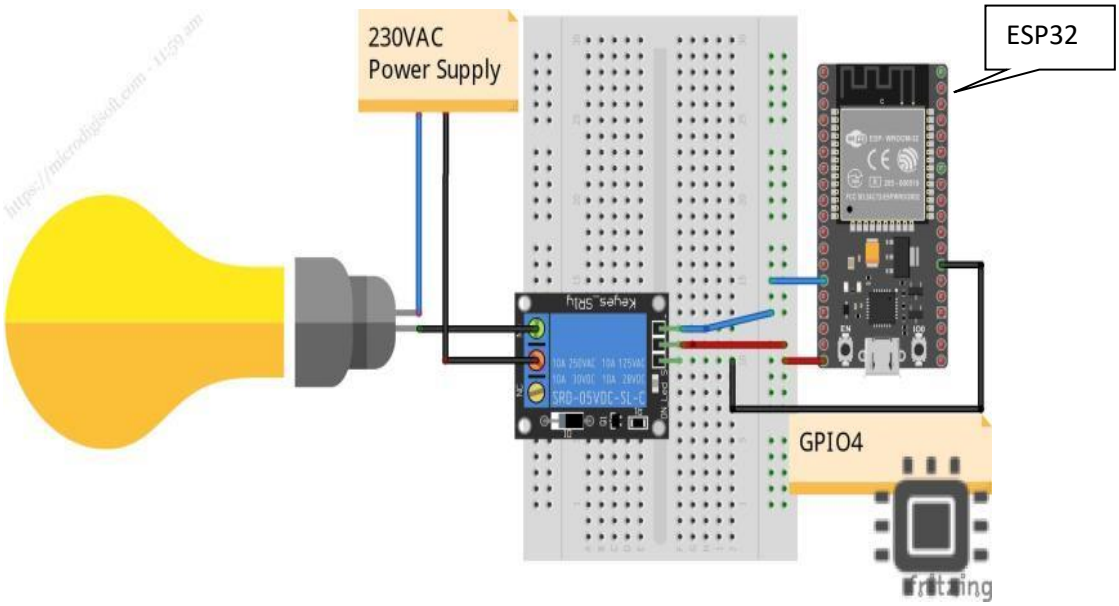

Figure 1: Wiring and Connections on the ESP32 Arduino board

The relay module is connected to the ESP32, ensuring proper handling of high voltage (230VAC) to avoid serious injuries or shocks.

IoT Cloud Platform:

We utilized ESP32 Arduino and MQTT services or IoT platforms to convert traditional electrical devices into smart devices.

Choosing the Best IoT Platform for ESP32:

Several platforms were considered, including:

1. IBM Watson IoT
2. Azure IoT platform
3. Blynk
4. Temboo
5. myDevices

SIM800L GSM/GPRS Module:

This miniature GSM modem enables:

1. Sending SMS messages
2. Making phone calls
3. Connecting to the Internet via GPRS
4. Quad-band GSM/GPRS networks

Communication Protocol:

The SIM800L uses AT commands for communication in AP mode, including:

1. AT: Basic command
2. AT + CSQ: Signal strength check

RUGIPO Research & Technical Journal; Vol. 3, Issue 1: Issues in Science & Agricultural Technology is a Bi-annual Publication Series of Rufus Giwa Polytechnic, Owo (RUGIPO), Ondo State. All correspondence or submission of articles for scholarly publication in the next edition of this Journal should be mailed to rugipotechjournal@rugipo.edu.ng, or rugiporetechjournal@gmail.com. For further enquiries, please contact +234 803 385 8795 or +234 903 405 9787.

RUGIPO Research & Technical Journal; Vol. 3, Issue 1: Issues in Science & Agricultural Technology; Sept, 2024 Edition
https://elearning.rugipo.edu.ng/Rugipo_Tetfund_Journal_Research_Portal/
ISSN: 2714-3643 E-mail: rugipotechjournal@rugipo.edu.ng, or rugiporetechjournal@gmail.com.
Proudly Sponsored by: tetfund TERTIARY EDUCATION TRUST FUND
TETFund/ESS/POLY/OWO/ARJ/1

3. AT + CCID: SIM card number verification
4. AT + CREG: Network registration check
5. ATI: Module name and number retrieval
6. AT + COPS: Network connection check
7. AT + CBC: Battery percentage retrieval

UART Communication:
The ESP32 uses UART to communicate with the SIM800L and for debugging.
Dual-Mode Control:
The ESP32's Wi-Fi and Bluetooth capabilities enable:
1. Control via IoT cloud platform
2. Control via Bluetooth app
3. Automatic Wi-Fi connection after 5 seconds

Relay Configuration:
The COM of the relay must be connected to a power supply. The Normally Open (NO) or Normally Closed (NC) pin is chosen based on the 'active high' or 'active low' configuration.

Result
After uploading the program, it was observed that the relay module, ESP32 module, and Home Automation application powered up and connected within seconds. The smart home automation system, based on the ESP32 Wi-Fi + Bluetooth Module, functioned flawlessly without false triggering. The system's versatility allows the replacement of light bulbs with other 110/220Vac loads. Upon successful Wi-Fi connection, the blue LED indicator turns on, enabling control of the relay module through the IoT Cloud Platform.

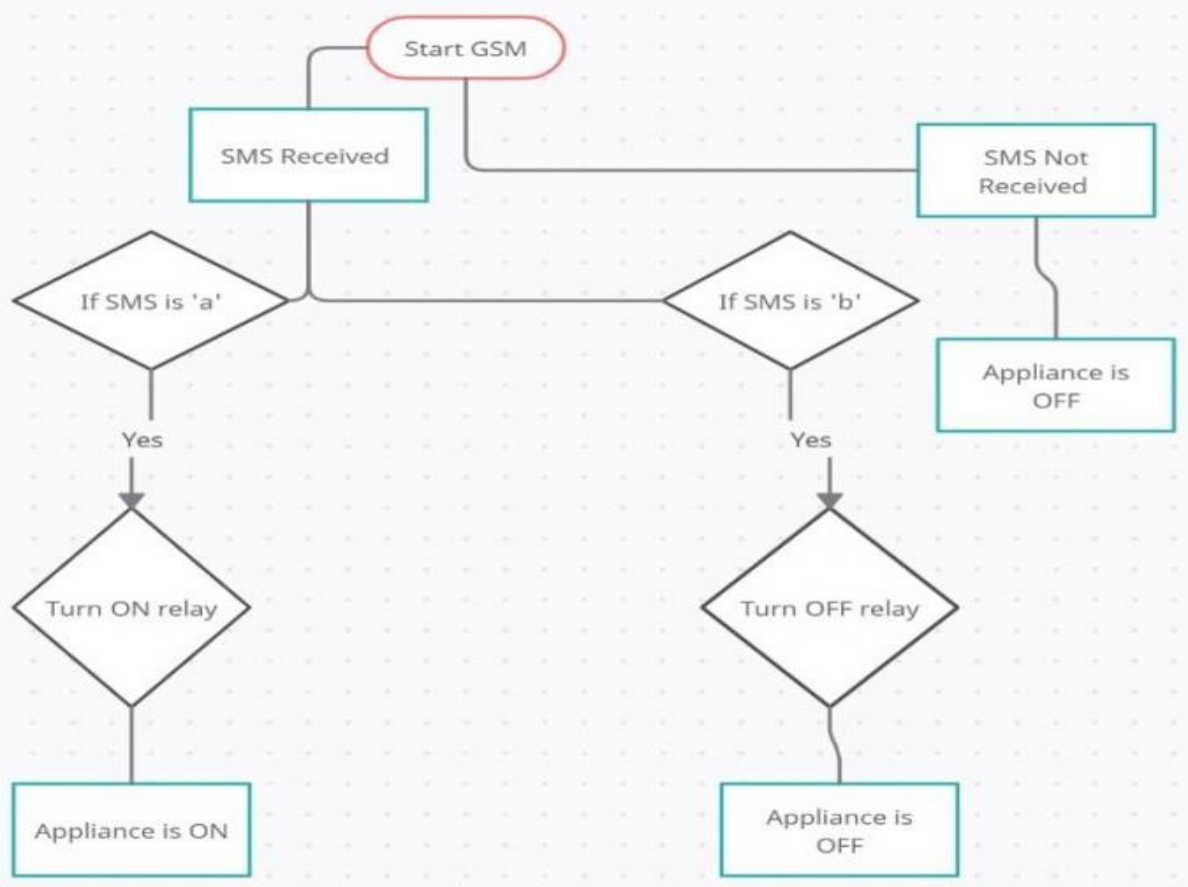

Figure 2: Circuit connection chat

Discussion
Commands sent from a mobile phone to the GSM module are detected by Arduino, which then sends corresponding signals to the relay module. Specifically sending the alphabet "a" turns the appliance on, while

RUGIPO Research & Technical Journal; Vol. 3, Issue 1: Issues in Science & Agricultural Technology is a Bi-annual Publication Series of Rufus Giwa Polytechnic, Owo (RUGIPO), Ondo State. All correspondence or submission of articles for scholarly publication in the next edition of this Journal should be mailed to rugipotechjournal@rugipo.edu.ng, or rugiporetechjournal@gmail.com. For further enquiries, please contact +234 803 385 8795 or +234 903 405 9787.

sending "b" turns it off. The appliance is connected to the microcontroller board via a relay, with Arduino continuously monitoring incoming data from the GSM module. Figure 3 illustrates the trigger operation of the SIM800L automation. This smart home automation system based on the ESP32 Wi-Fi + Bluetooth Module worked perfectly. There was no false triggering. You can replace these light bulbs with other types of 110/220Vac loads. After uploading the code, if the ESP32 connects with the Wi-Fi, the blue LED will turn on. Then you can control the relay module from the IOT Cloud Platform. These commands are defined in Arduino code. When we send a command message from our phone to the GSM module, then Arduino detects this message and sends the command to the relay module. Using our mobile phone to send a message to the GSM module. That message will contain a single alphabet. Suppose we have one appliance, then we will have one alphabet to turn ON the appliance and one alphabet to turn OFF the appliance. Since we are sending an alphabet “a” to turn ON the appliance and an alphabet “b” to turn OFF the appliance. Our appliance is connected to the microcontroller board via a relay. Arduino will be continuously monitoring the data coming from the GSM module. If the GSM module receives a message that contains the alphabet “a” then Arduino will turn ON the Appliance by sending a signal to the relay module.

Conclusion

The IoT (the internet of things) has a wider scope in every aspect of life. As we know the lives of people are becoming busier. So, the use of IOT-based appliances is increasing rapidly because these devices or appliances are making our lives fast and comfortable. There are different sectors where IoT-based devices are used such as Industry, commercial organizations, hospitals, etc. Apart from the several uses of IOT devices, these are used for home automation. IoT-based home appliances can be easily managed from a distance. The concept of Artificial intelligence and the Internet of Things can be combined to make life easier and more comfortable. Android is the world’s powerful mobile platform open-source operating system that easily whatever functionality we have in mind. In this work, we implemented a smart home automation system at a reasonable price using some of the cost-effective devices where security and authenticity were our topmost concerns. In this way, it helps to overcome many problems such as cost, security, flexibility and simplicity of operation.

References

Ahmed, E. (2012). Development of IoT-based home automation system using Bluetooth and Wi-Fi communication. *International Journal of Computer Science and Information Technology, 2(3): 33-40*.

Brush, J., Lee, B., Mahajan, R., Agarwal, S., Saroiu, S. and Dixon, C. (2011). Home automation in the wild. Special Interest Group on Computer-Human Interaction. Conference Human Factors Computing. System. Boston, May 2011, p. 2115.

Deepali, J., Nandanwar, M., and Mohsin S. (2013). Home Automation and Security System Using Android ADK. *International Journal of Electronics Communication and Computer Technology, 3(2): 382 – 385*.

Hamernik, J. and Kaur, R. (2012). Smart Home Automation Using Bluetooth Low Energy. *Journal of Intelligent Information Systems, 46(2): 247-257*.

Shaikh, A., Londhe, N., Birhade, A., Gaikwad, J. and Kodak, P. (2017). Architecture for Internet of Things for home automation. *International Journal of Engineering and Computer Science, 6(2): 20251-20253.* DOI: 10.18535/ijecs/v6i2.16

Tiwari, A. and Kumar, A. (2018). Smart Home Automation System using Bluetooth Low Energy 2018 International Conference on Electrical, Electronics and Computing Engineering. 1-5.

Vijay, K., Kaushik, K. C. and Tarun, G. (2022). Bluetooth-Based Home Automation System. *International Journal of Engineering Research in Electronics and Communication Engineering, 9(5): 5-10.*

Vinay Sagar, K. (2015). Home Automation Using Internet of Things. *International Research Journal of Engineering and Technology, 2(3): 1965-1970.*